40W Power Booster/Amplifier

OWNER'S MANUAL — Please read before using this equipment.

Your RadioShack 40W Power Booster/Amplifier boosts the power output from your stereo car radio or tape player to enhance the sound of your car audio system. The booster is compact and easy to install using the supplied mounting bracket.

Be sure to read this entire manual for proper installation and operation.

If you are unsure about any part of installation, we recommend you have an automotive audio specialist install the booster. Improper wiring could damage your vehicle's electrical system.

INSTALLATION

Before you install the booster, be sure your vehicle, radio/tape player, and speakers meet the following requirements:

- The vehicle must have a 12-volt DC, negative-ground electrical system.
- The radio/tape player must be a BTL (Balanced Transformer-Less) or common-ground type.
- The speakers' total power handling capacity should be at least 40 watts. For example, if you use four 8-ohm speakers, each speaker must be able to handle at least 10 watts. If the power-handling capacity is too low, you might damage your speakers.

Connecting the Booster's Wiring

Follow these steps to connect the booster using the radio/tape player's front speaker connector.

Connection between the booster and radio/tape player's front speaker requires wire connectors available at your local RadioShack store.

1. Connect the radio/tape player's front left positive (+) speaker wire to the booster's white wire.

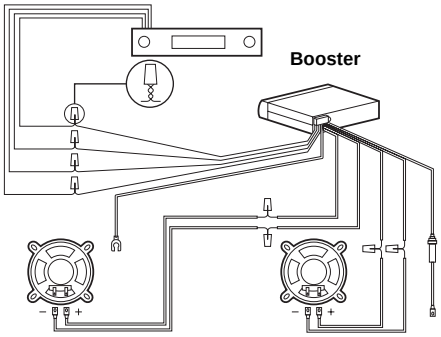

2. Connect the radio/tape player's front left negative (–) speaker wire to the booster's white wire with a black line.
3. Connect the radio/tape player's front right positive (+) speaker wire to the booster's gray wire.
4. Connect the radio/tape player's front right negative (–) speaker wire to the booster's gray wire with a black line.
5. Connect the booster's black ground wire to a chassis ground such as a clean, metal bolt attached to the vehicle's frame. Be sure the bolt is not insulated from the frame by a plastic part.

RadioShack®
www.radioshack.com™

© 2000 RadioShack Corporation. All Rights Reserved.
RadioShack and RadioShack.com are trademarks
used by RadioShack Corporation.

Caution: To ensure proper operation of the booster and to prevent damage to the speakers, use a separate wire to connect each speaker terminal. Do not use a common wire to join two speakers' negative (–) terminals.

Mounting the Booster

Before you mount the booster, choose a mounting location under the dash that allows convenient connections and operation.

1. Use the supplied mounting bracket as a template to mark the screw holes on the mounting surface.
2. Drill the screw holes, taking care not to drill into wires or other objects behind the mounting surface.
3. Attach the bracket to the mounting surface using the two supplied self-tapping screws. Then, mount the booster to the bracket using the supplied screws.

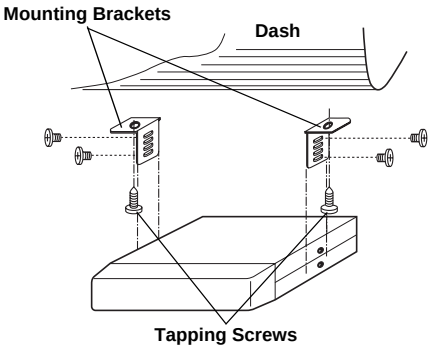

OPERATION

Press **POWER** to turn on the booster. The booster's power indicator lights. If the indicator does not light, the fuse between the booster and the 12-volt power source might be blown. Check the fuse and if necessary, replace it with a 6 amp fuse.

SPECIFICATIONS

Output Impedance	4 to 8 Ohms
Output Power	20 Watts per Channel (4 Ohms) 40 Watts Total
Frequency Response	100 Hz – 10 kHz
Power Supply	12-Volt DC, Negative Ground
Dimensions	1 × $4^{3}/_{16}$ × $4^{5}/_{16}$ Inches (2.5 × 10.6 × 11 cm HWD)
Weight	12 oz (0.34 kg)

Limited One-Year Warranty

This product is warranted by RadioShack against manufacturing defects in material and workmanship under normal use for one (1) year from the date of purchase from RadioShack company-owned stores and authorized RadioShack franchisees and dealers. EXCEPT AS PROVIDED HEREIN, RadioShack MAKES NO EXPRESS WARRANTIES AND ANY IMPLIED WARRANTIES, INCLUDING THOSE OF MERCHANTABILITY AND FITNESS FOR A PARTICULAR PURPOSE, ARE LIMITED IN DURATION TO THE DURATION OF THE WRITTEN LIMITED WARRANTIES CONTAINED HEREIN. EXCEPT AS PROVIDED HEREIN, RadioShack SHALL HAVE NO LIABILITY OR RESPONSIBILITY TO CUSTOMER OR ANY OTHER PERSON OR ENTITY WITH RESPECT TO ANY LIABILITY, LOSS OR DAMAGE CAUSED DIRECTLY OR INDIRECTLY BY USE OR PERFORMANCE OF THE PRODUCT OR ARISING OUT OF ANY BREACH OF THIS WARRANTY, INCLUDING, BUT NOT LIMITED TO, ANY DAMAGES RESULTING FROM INCONVENIENCE, LOSS OF TIME, DATA, PROPERTY, REVENUE, OR PROFIT OR ANY INDIRECT, SPECIAL, INCIDENTAL, OR CONSEQUENTIAL DAMAGES, EVEN IF RadioShack HAS BEEN ADVISED OF THE POSSIBILITY OF SUCH DAMAGES.

Some states do not allow limitations on how long an implied warranty lasts or the exclusion or limitation of incidental or consequential damages, so the above limitations or exclusions may not apply to you.

In the event of a product defect during the warranty period, take the product and the RadioShack sales receipt as proof of purchase date to any RadioShack store. RadioShack will, at its option, unless otherwise provided by law: (a) correct the defect by product repair without charge for parts and labor; (b) replace the product with one of the same or similar design; or (c) refund the purchase price. All replaced parts and products, and products on which a refund is made, become the property of RadioShack. New or reconditioned parts and products may be used in the performance of warranty service. Repaired or replaced parts and products are warranted for the remainder of the original warranty period. You will be charged for repair or replacement of the product made after the expiration of the warranty period.

This warranty does not cover: (a) damage or failure caused by or attributable to acts of God, abuse, accident, misuse, improper or abnormal usage, failure to follow instructions, improper installation or maintenance, alteration, lightning or other incidence of excess voltage or current; (b) any repairs other than those provided by a RadioShack Authorized Service Facility; (c) consumables such as fuses or batteries; (d) cosmetic damage; (e) transportation, shipping or insurance costs; or (f) costs of product removal, installation, set-up service adjustment or reinstallation.

This warranty gives you specific legal rights, and you may also have other rights which vary from state to state.

RadioShack Customer Relations, 200 Taylor Street, 6th Floor, Fort Worth, TX 76102

We Service What We Sell *12/99*

RadioShack Corporation
Fort Worth, Texas 76102

12-1869 B
07A00
Printed in China